TS1 - BATHTUB-SHOWER COMBO - TYPE B

AQUATIC
The bath people

Submittal Sheet

Aquatic products may be specified as Lasco Bathware.

2603SMTE

ANSI Compliant

CUSTOMER: _____

JOB NAME: _____

PO #: _____

QUOTE #: _____ QUANTITY: _____

SHIP TO: _____

_____

_____ ____/____/____
PLUMBING CONTRACTOR APPROVAL DATE

_____ ____/____/____
GENERAL CONTRACTOR APPROVAL DATE

_____ ____/____/____
ENGINEER APPROVAL DATE

_____ ____/____/____
ARCHITECT APPROVAL DATE

IMPORTANT: **ADA compliant showers with NO interior threshold will have water escape onto the bathroom floor. Aquatic highly recommends you take the following precautions:**

1. Install only the minimum number of ADA units without an interior threshold required for each job. If possible install Aquatic's accessible models that have a ½ (15) interior threshold to reduce the amount of water that escapes from the shower.
2. When installing units with NO interior threshold, install a FLOOR DRAIN to control the water that escapes onto the bathroom floor.
3. Depending on your application, you may choose to install Aquatic's vinyl flexible dam or removable threshold, which helps better retain water within the shower. However, these items may not necessarily meet ADA or other code requirements. Always confirm code compliance with your local building authority.

Includes plywood backing, see third page

STANDARD FEATURES

- Code compliant when fully equipped and installed according to guidelines
- Extra wide tub
- Integral toiletry shelves
- LH or RH drain location
- Slip resistant, textured bottom [ASTM F-462]

CONFIGURATION

☐ Fully equipped with seat — ANSI
Includes four 24" x 1½" diameter grab bars; one 18" x 1½" Diameter vertical grab bar; tri-fold removable seat pressure balancing mixing valve and hand-held shower assembly per ANSI guidelines

CUSTOM OPTIONS (not available if ANSI configuration is selected)

Fixture Wall ☐ LH ☐ RH

Grab bars:
Four horizontal 24"and one vertical 18"
Stainless steel (1½" dia.) ☐ LH ☐ RH
Powder-coated white (1¼" dia.) ☐ LH ☐ RH

☐ Tri-fold, plastic removable seat
☐ Teakwood finish fold up seat
☐ Hand-held shower assembly with 30" slide bar and 60" hose
☐ Pressure balancing mixing valve

OPTIONAL ACCESSORIES (available for all models)

☐ Soap dish
☐ Curtain rod (Not ANSI compliant)
☐ Shower curtain
☐ Brass drain

Standard colors
☐ Almond ☐ Biscuit ☐ Bone ☐ White
☐ Other (contact customer service for custom color options)

☐ Additional accessories

For pricing of units and additional options, reference the Aquatic Price Book.

Grab bars, seat, hand shower will not be provided on this unit.

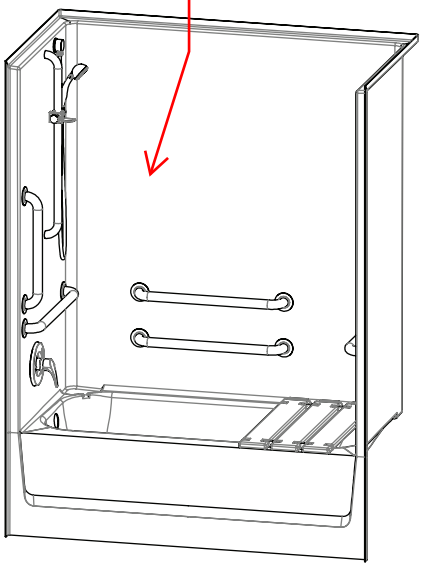

Int. Dim.	56 W x 30 ¼ D x 78 H (1420 x 770 x 1980)
Ext. Dim.	60 W x 33 ¼ D x 79 ¼ H (1525 x 845 x 2015)
Skirt Ht.	17 (430) skirt
Packaged Wt.	209 lbs. (95 kg.) gross
Material	Gelcoat
Warranty	Gelcoat Finished Products — Five Years

inches (mm)

To complete your order, this document must be signed and faxed to the Aquatic Centralized Customer Service Center.
Fax (866) 544-5353 • Phone (800) 945-2726

TS1 - BATHTUB-SHOWER COMBO - TYPE B

AQUATIC

Submittal Sheet

Aquatic products may be specified as Lasco Bathware.

2603SMTE ANSI Compliant

Please indicate changes needed.

Grab bars, seat, hand shower will not be provided on this unit. See memo attached for control elevations and showerhead rough-in locations.

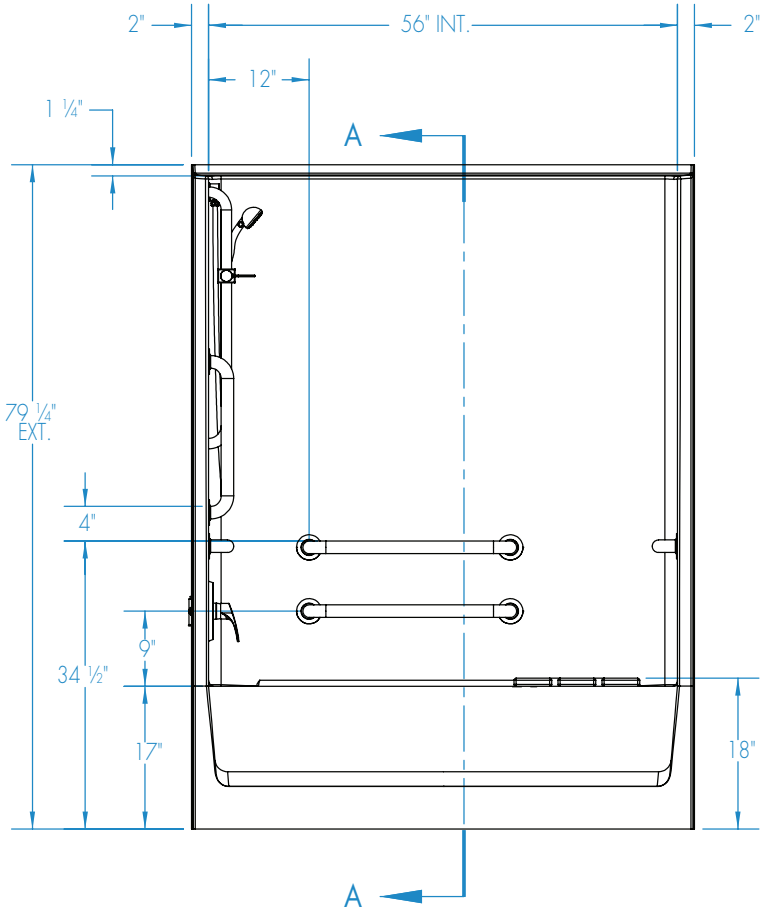

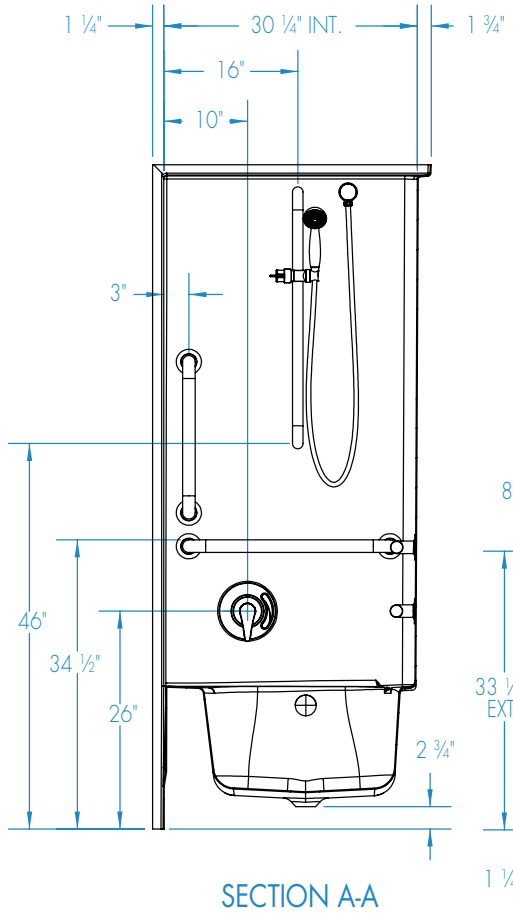

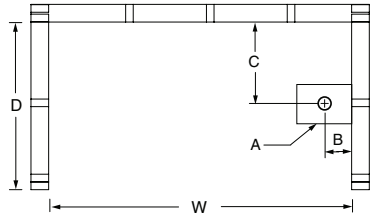

FRAMING DIMENSIONS inches (mm)

Type	D Depth	W Width	A	B	C
Alcove	33 ¼ (845)	60 ⅛ (1525)	6 x 12 (150 x 305)	1 ½ (40)	15 (380)

Installation Options:
1. Install in a recessed pit for rough-in floor installation.
2. Build sub-floor to level finished floor with top of shower threshold.

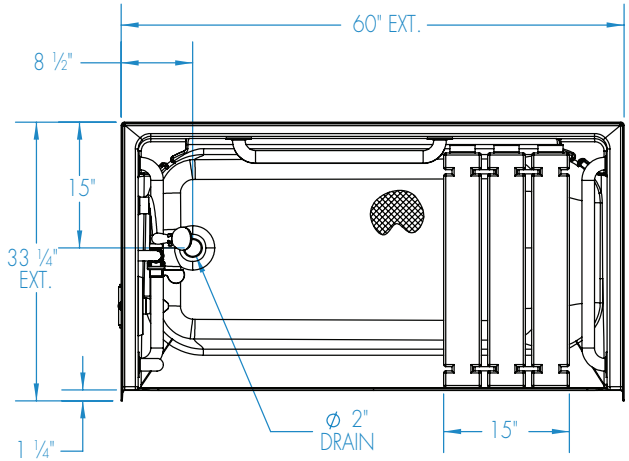

Shell tolerance: +0, – ⅜" All other tolerances: ±1"

FAX TO THE AQUATIC CENTRALIZED CUSTOMER SERVICE CENTER (866) 544-5353

Rev. 01.27.16

TS1 - BATHTUB-SHOWER COMBO - TYPE B

AQUATIC

Submittal Sheet

Aquatic products may be specified as Lasco Bathware.

2603SMTE ANSI Compliant

Please indicate changes needed.

Reinforcement Locations (Standard)

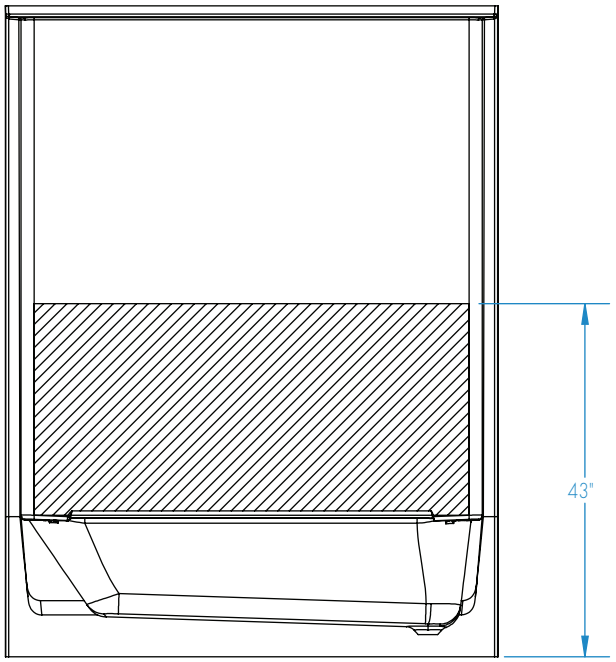

BACK VIEW

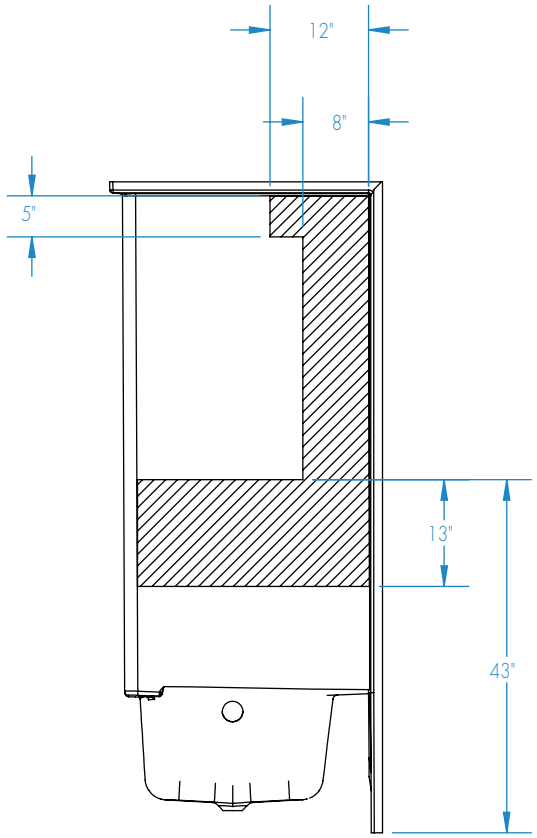

SIDE VIEW (typ.)

= 3/8" OSB REINFORCEMENT

Shell tolerance: +0, – ⅜" All other tolerances: ±1"

FAX TO THE AQUATIC CENTRALIZED CUSTOMER SERVICE CENTER (866) 544-5353

Rev. 01.27.16